walraven

BIS Wall Plate 670

(K 15 05)

fixing to ceiling or floor

Features and benefits

- fixings to ceiling or floor (only tension loads recommended)
- slots at 90° to each other to simplify fixing
- with resistance welded connection nut
- material: steel
- zinc plated

Part No.	G	H (mm)	$F_{a,z}$ (N)	Pack 1	Pack 2
6703006	M6	6	2,500	50	250
6703008	M8	8	2,500	50	250
6703009	M8/10	18	2,500	50	200
6703010	M10	10	2,500	50	250
6703016	M16	13	2,500	50	250
6703021	G½"	15	2,500	50	200

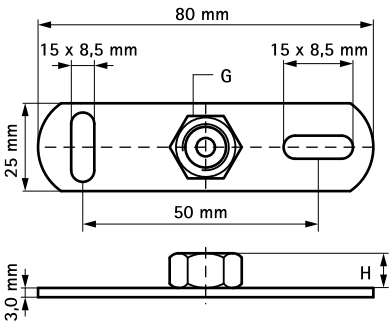

Complementary

Walraven Stud Bolt