BIS Ventilation Duct Connector

(F 30 05)

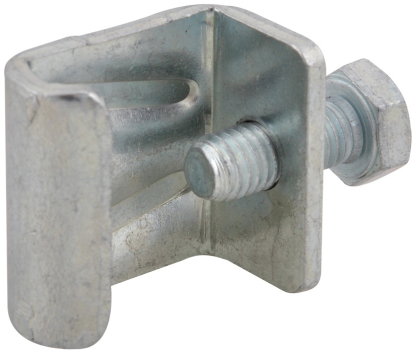

Features and benefits

- material: steel 1.0332
- zinc plated
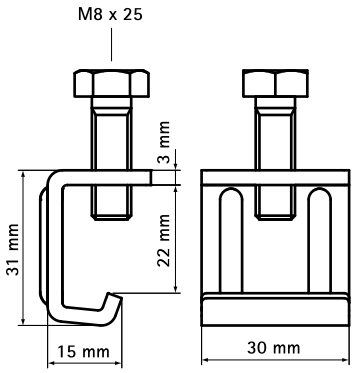
Part No.	Pack 1
4125020	200