walraven

BIS Strut Stainless Steel Slide Nut

(M 55 04)

fixing to Strut rail

Features and benefits

- for all types of Strut Rail
- for tight fixing of accessories (e.g. connectors) on rail
- material: stainless steel 1.4401 (AISI 316)

Part No.	G	s (mm)	$T_{(inst.)}$ (Nm)	For Rail	$F_{a,z}$ (N)	$F_{a,x}$ (N)	Pack 1	Pack 2
6517706	M6	6.0	7.0	Strut	2,660	950	25	250
6517708	M8	6.0	25.0	Strut	4,500	2,200	25	250
6517710	M10	8.0	40.0	Strut	5,000	2,550	25	250
6517712	M12	9.0	50.0	Strut	5,000	2,950	25	250

Tested values in combination with BIS RapidStrut® Rail 41x41x2.5mm.
More details can be found on the Technical Datasheet.

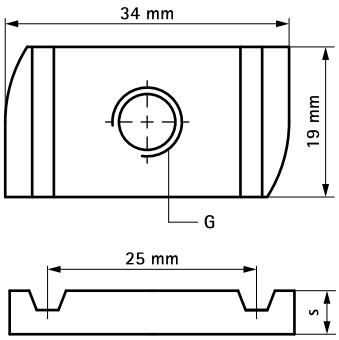

Complementary

Walraven RapidStrut® Stainless Steel Fixing Rail
Walraven RapidStrut® Stainless Steel Cantilever Arm

Alternative

Walraven RapidStrut® Stainless Steel Slide Nut with Tabs