BIS Stainless Steel Rail Connector

(M 34 05)

to make Walraven RapidRail® fabrications

6587090 6587135

Features and benefits

- to make rail fabrications
- material: stainless steel 1.4401 (AISI 316)

Part No.	a (°)	For Rail	Pack 1
6587090	90°	30x15, 30x20, 30x30	50
6587135	135°	30x15, 30x20, 30x30	50

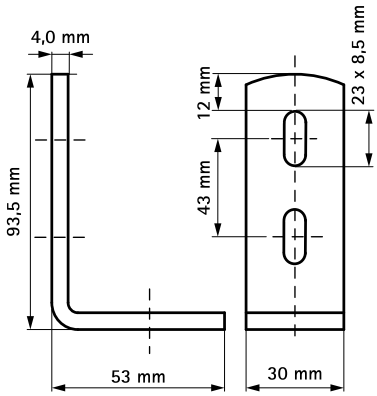

658 7 090

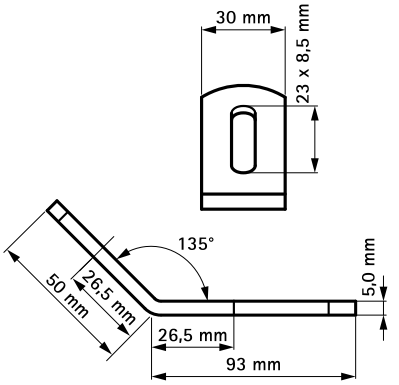

658 7 135

Complementary

Walraven RapidRail® Stainless Steel Fixing Rail