walraven

BIS Nail Shoulder Stud

(L 15 20)

fixing to wall or ceiling

Features and benefits

- material: tempered steel
- zinc plated
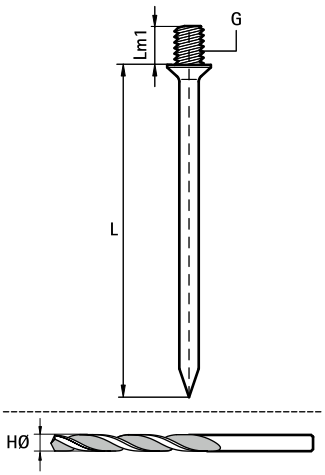
Part No.	G	L	Lm1 (mm)	HØ (mm)	Pack 1	Pack 2
6333618	M6	18 mm	8	4	100	3,000
6333625	M6	25 mm	8	4	100	3,000
6333630	M6	30 mm	8	4	100	2,000
6333640	M6	40 mm	8	4	100	2,000
6333655	M6	55 mm	8	4	100	1,800