walraven

BIS IKS-2000® Mounting Band

(N 30 10)

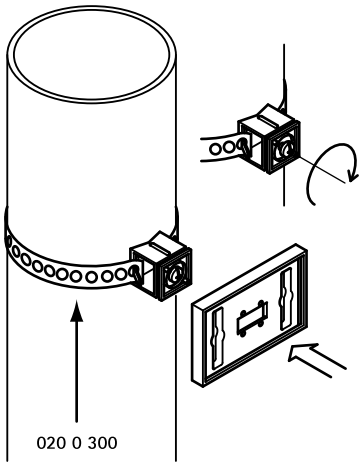

Features and benefits

- for fastening of IKS Text Card Holders
- material: stainless steel 1.4404 (AISI 316L)
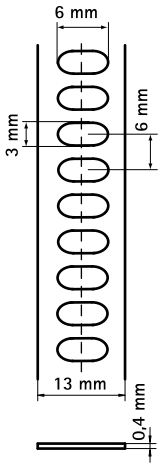
Part No.	L	Pack 1	App.
0200300	20 m	10	roll