walraven

BIS Duplo Double Clamp with Lining

(A 15 05)

for metal heating pipes 15 - 33 mm

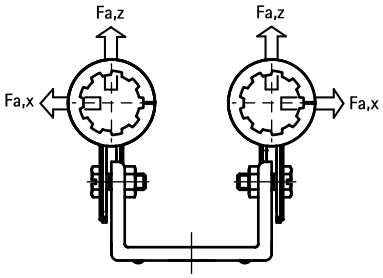

Features and benefits

- two clamps on connection bracket
- for fixing of two pipes
- space saving
- clampshells reinforced
- two parts of the clamp interlock
- bracket reinforced for extra strength
- tube insulation can easily be fitted
- pre-galvanized
- adjustable distance between pipe and wall
- material: steel
- age resistant lining
- sound insulating lining according DIN 4109

Part No.	D (mm)	D (")	DN	B (mm)	H1 (mm)	h1 (mm)	Colour	$F_{a,z}$ (N)	$F_{a,x}$ (N)	Pack 1
3211015	15	-	-	82	58 - 74	48 - 64	White, TPE	200	100	25
3211022	22	1/2	15	89	65 - 81	51 - 67	White, TPE	200	100	25
3215015	15	-	-	82	58 - 74	48 - 64	Black, EPDM	200	100	25
3215021	22	1/2	15	89	65 - 81	51 - 67	Black, EPDM	200	100	25
3215027	28	3/4	20	95	71 - 87	54 - 70	Black, EPDM	200	100	25
3215033	33	1	25	104	76 - 92	57 - 73	Black, EPDM	200	100	25

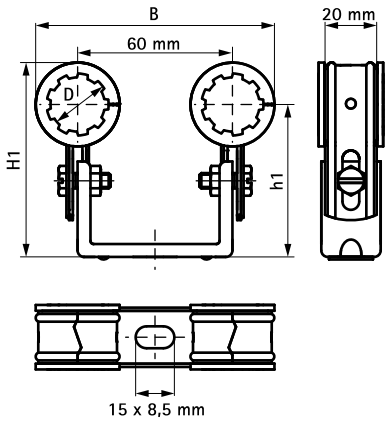

Complementary
Walraven Under Floor / Radiator Brackets

Alternative
BIS Duplo KS