walraven

BIS Console Kit ISO - with Bridging

(G 25 10)

wall fixing of appliances

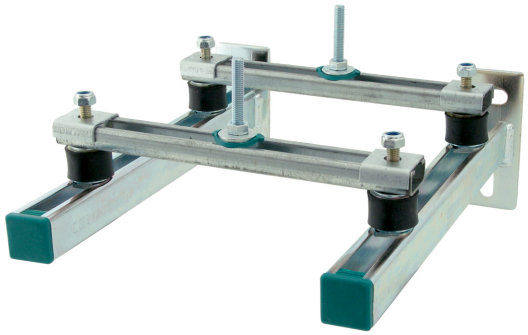

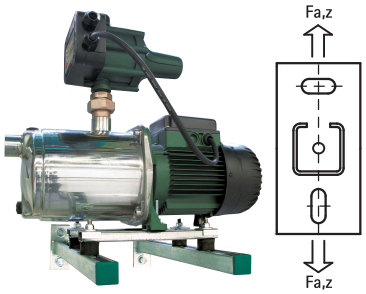

Features and benefits

- universal fixing kit
- for wall fixing of water pumps, compressors and other light duty machinery
- bridging rail for fixing of devices with 2 fixing holes
- vibration isolators pre-assembled with slide nut, washer and hexagon head lock-nut
- material: steel
- zinc plated
- noise insulation by use of vibration isolators (support made of vulcanized rubber)
- consists of:
  - 2 Cantilever arms
  - 2 bridgings of rail 30x15 mm
  - 4 Vibration isolators
  - 2 Slide tee-bolt assemblies
  - 2 Rail End Caps
  - 1 Mounting kit
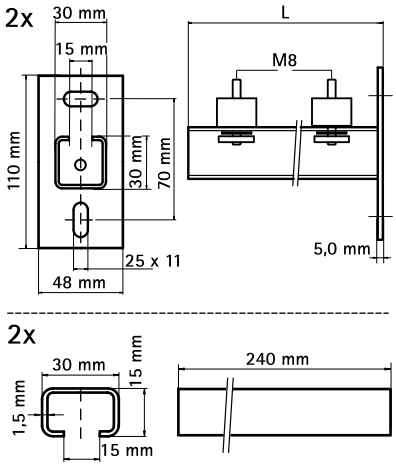
Part No.	L	$T_{(inst.)}$ (Nm)	From rail	$F_{a,z}$ (N)	Pack 1
6923235	300 mm	15.0	30x30	1.000	-
6923245	400 mm	15.0	30x30	770	-